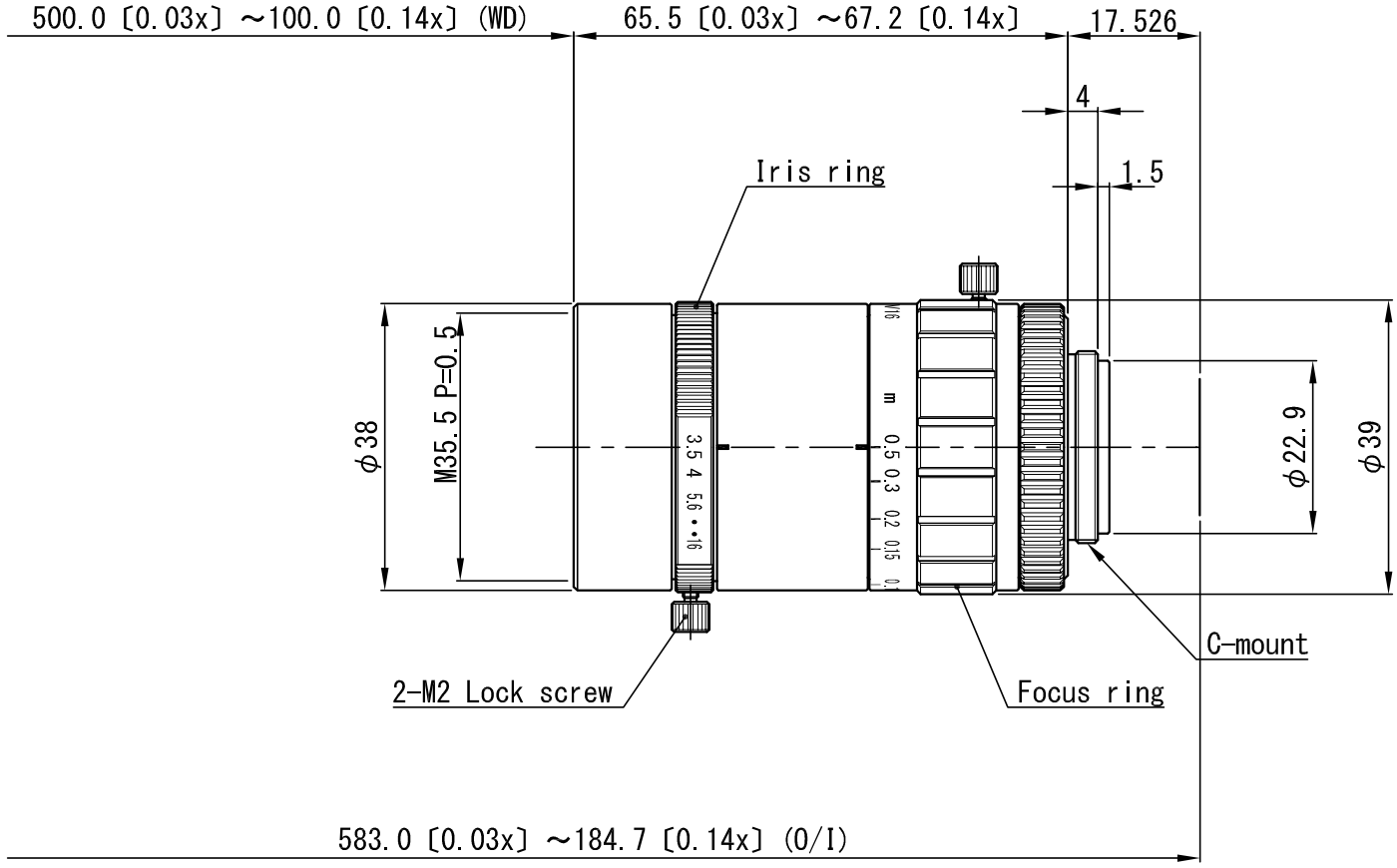


| NO.×箇所 | REVISION 訂正事項 | DATE | NAME |
|---|---|---|---|
| △× | | | |
| △× | | | |
| △× | | | |
| △× | | | |
| △× | | | |

| APPROVED | CHECKED | DESIGNED | DRAWN |
|---|---|---|---|
| K.T. | T.A. | T.S. | T.S. |

| MATERIAL 材料 | – | CHAMFER 一般面取 | – | QUANTITY 個数 |
|---|---|---|---|---|
| TREATMENT 処理 | – | FINISHING 仕上 | – | |
| TREATMENT CONTACT 処理接点 | – | DECENTRATION 偏芯 | – | |

| TOLERANCES | A | B | C | S |
|---|---|---|---|---|
| OVER 250 UP TO 1000 | ±0.3 | ±0.5 | ±1.0 | ±0.2 |
| OVER 63 UP TO 250 | ±0.2 | ±0.3 | ±0.6 | ±0.15 |
| OVER 16 UP TO 63 | ±0.1 | ±0.2 | ±0.4 | ±0.1 |
| OVER 0 UP TO 16 | ±0.05 | ±0.1 | ±0.2 | ±0.1 |

| UNIT(mm) | ANGLE 角度 | METHOD 図法 | REMARK 適用（機種名） |
|---|---|---|---|
| | – | | VS-LDV16 |
| SCALE | 1 / 1 | NAME | 外観図 |
| DATE | '20.09.07 | DRAW NO. | ODLD0054A1 |