Confidential

Cable tag



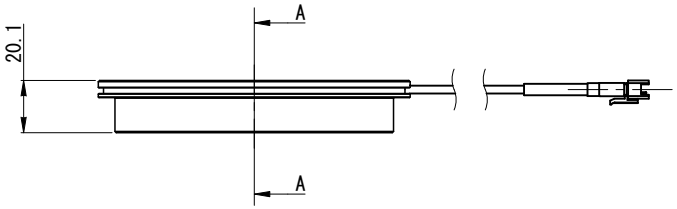

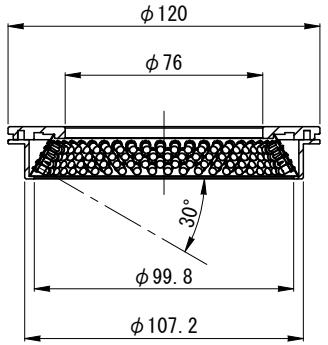

Section A:A

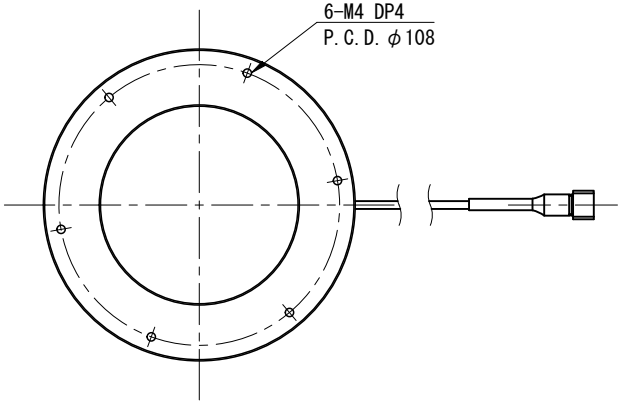

Connector : JST SMR-03V-B

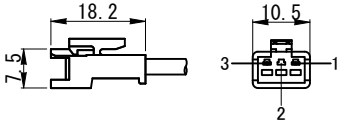

Minimum Bending Radius : 20mm
Length : 500±20mm
Note : This cable can not slide

Pin	Polarity	Wire Color
1	+	BK/WH
2	NC	
3	−	BK

MATERIAL			CHAMFER	−	UNIT	METHOD 図法
TREATMENT	−		FINISHING	−	mm	
TREATMENT CONTACT	−		DECENTRATION	−		

NO.	REVISION	DATE	NAME
⚠×			

APPROVED	CHECKED	DESIGNED	DRAWN		
LEE	LEE	DENY	DENY	TOLERANCE	−
				ANGLE	−
				SCALE	1 / 2
				DATE	2020/12/28

REMARK	VLR-12076
NAME	DRAWING
DRAW NO.	L1111A-A00100