Confidential

Cable tag



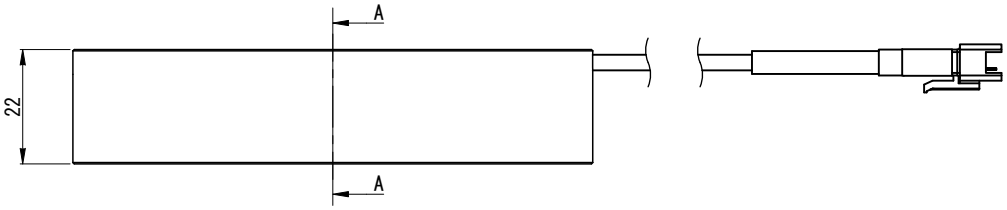

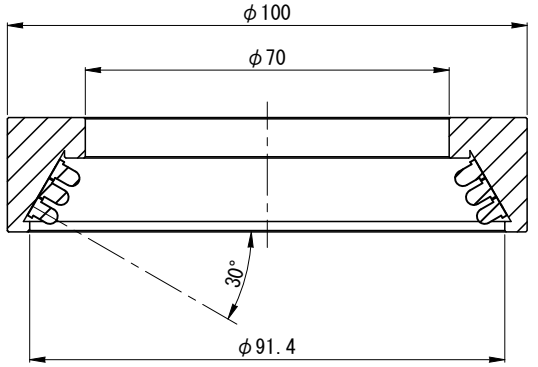

Section A:A

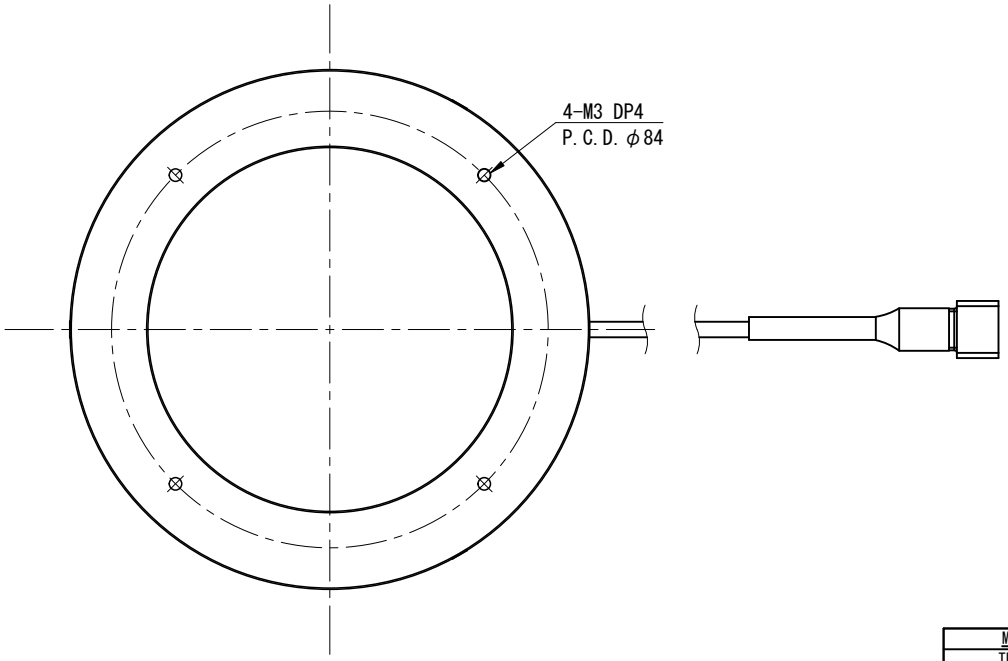

Connector : JST SMR-03V-B

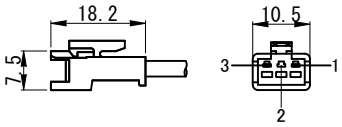

Minimum Bending Radius : 20mm
Length : 500±20mm
Note : This cable can not slide

Pin	Polarity	Wire Color
1	+	BK/WH
2	NC	
3	−	BK

MATERIAL				CHAMFER	−	UNIT	METHOD 図法		
TREATMENT	−			FINISHING	−	mm			
TREATMENT CONTACT	−			DECENTRATION	−				
APPROVED	CHECKED	DESIGNED	DRAWN	TOLERANCE	−	REMARK	VLR-10070		
				ANGLE	−				
LEE	LEE	DENY	DENY	SCALE	1 / 1	NAME	DRAWING		
				DATE	2021/08/02	DRAW NO.	L1110A-A00100		

NO.	REVISION	DATE	NAME
⚠×			