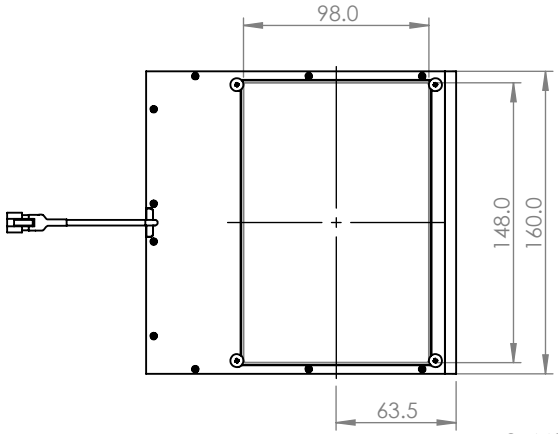

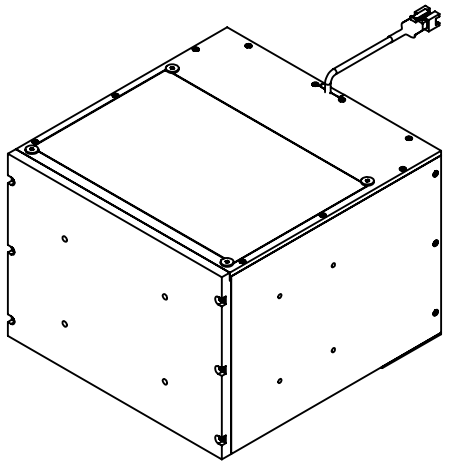

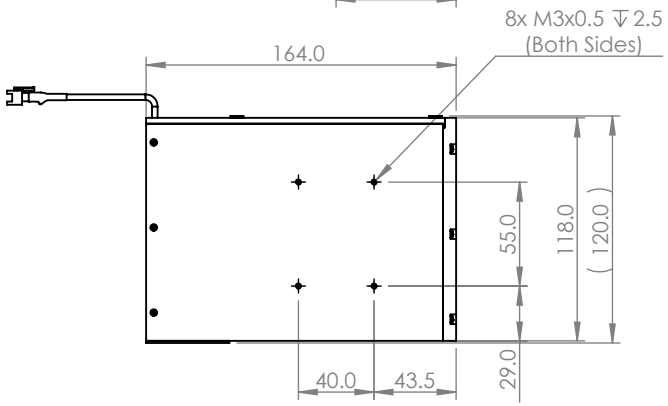

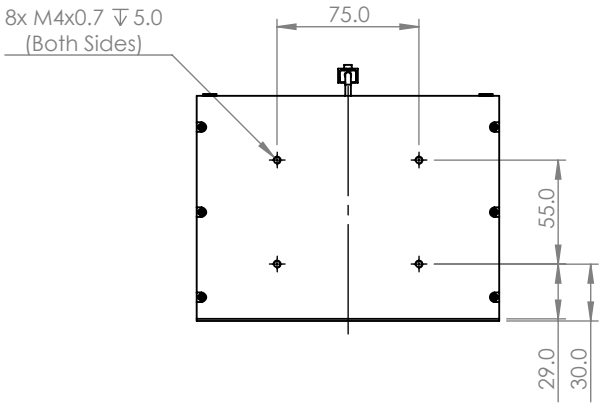

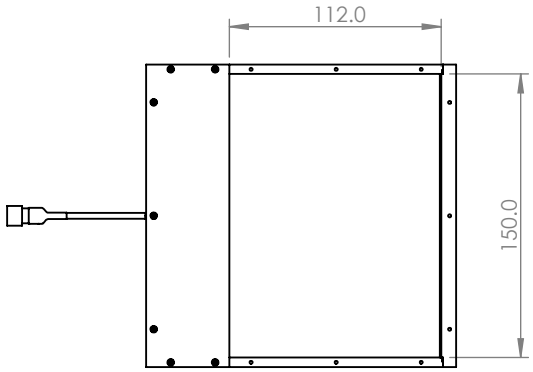

Pin Table	
	1. V+
	2. N.C.
	3. V-

Standard Cable Length : 500mm
Standard Connector : SM2.5 3P

Note:
Model Name Descriptions
VCO-150113☐
☐ : Color

No. / TOTAL	REVISION	DATE	NAME
△×			
△×			
△×			
△×			
△×	Add bottom view, adjust scale to 1:4	2023/4/25	Alex

APPROVED	CHECKED	DESIGNED	DRAWN
–	–	Alex	Alex

MATERIAL	-	CHAMFER	-	QUANTITY
TREATMENT	-	FINISHING	-	-
TREATMENT CONTACT	-	DECENTRATION	-	

TOLERANCES	A	B	C	S
OVER 250 UP TO 1000	±0.3	±0.5	±1.0	±0.2
OVER 63 UP TO 250	±0.2	±0.3	±0.6	±0.15
OVER 16 UP TO 63	±0.1	±0.2	±0.4	±0.1
OVER 0 UP TO 16	±0.05	±0.1	±0.2	±0.1

UNIT (mm)	ANGLE	METHOD	REMARK (MODEL)
	–		VCO-150113
SCALE	1:4	NAME	DRAWING
DATE	2023/4/25	DRAW NO.	TMEX2012D101C