Made in Taiwan

THE TAG WILL BE ATTACHED TO THE CABLE.

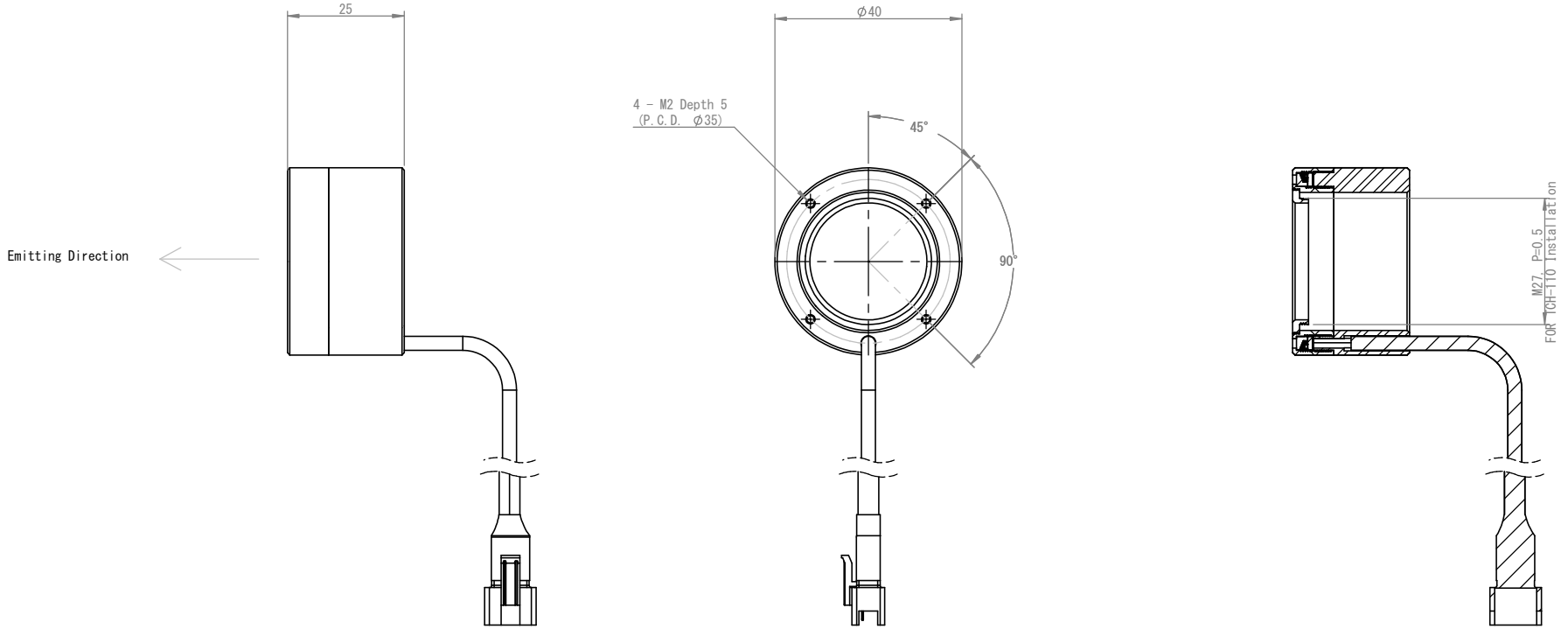

Cable: Minimum Bending Radius : 20mm (Stationary, Non-Flexible Cable)
Length : 500±20mm

Connector : JST SMR-03V-B

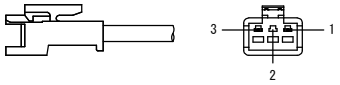

Pin	Polarity	Wire Color
1	+	RED
2	NC	
3	-	BK

MATERIAL	-	CHAMFER	-	UNIT	METHOD
TREATMENT	-	FINISHING	-	mm	
TREATMENT CONTACT	-	DECENTRATION	-		

APPROVED	CHECKED	DESIGNED	DRAWN				
T.Y.	T.Y.	B.C	B.C	TOLERANCE	-	REMARK	VAT-4030-W-TCH110
				ANGLE	-	NAME	Drawing
				SCALE	1 / 1	DRAW NO.	L1220A - A00100
				DATE	2024/02/02		

NO.	REVISION	DATE	NAME
⚠1 ×			