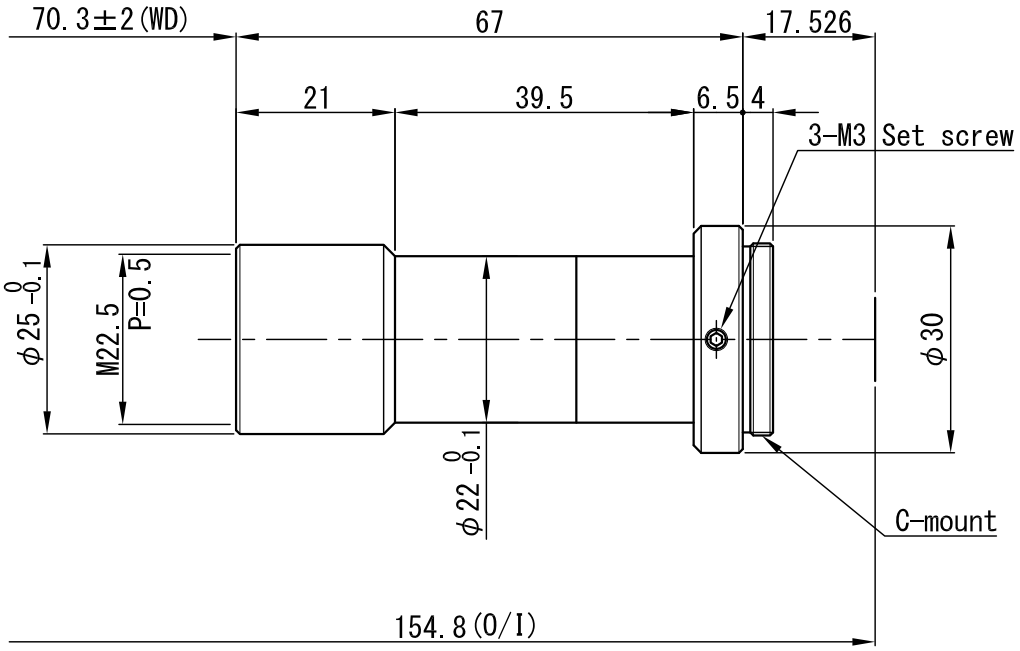

△				APPROVED	CHECKED	MATERIAL 材料				–	CHAMFER 一般面取		–	QUANTITY 個数	
△				T.A.	T.A.	TREATMENT 処理				–	FINISHING 仕上		–	–	
△						TREATMENT CONTACT 処理接点				–	DECENTRATION 偏芯		–		
△						OVER 250 UP TO 1000	±0.3	±0.5	±1.0	±0.2	UNIT(mm)	ANGLE 角度	METHOD 図法	REMARK 適用（機種名）	
△				DESIGNED	DRAWN	OVER 63 UP TO 250	±0.2	±0.3	±0.6	±0.15		–		VS-TCH08-65	
△				T.A.	T.T.	OVER 16 UP TO 63	±0.1	±0.2	±0.4	±0.1	SCALE	1 / 1	NAME	外観図	
						OVER 0 UP TO 16	±0.05	±0.1	±0.2	±0.1					
	DATE	EXCH NO.	REVISION 変更記事			TOLERANCES	Ⓐ	B	C	S	DATE	'11.04.27	DRAW NO.	ODTC0417A1	