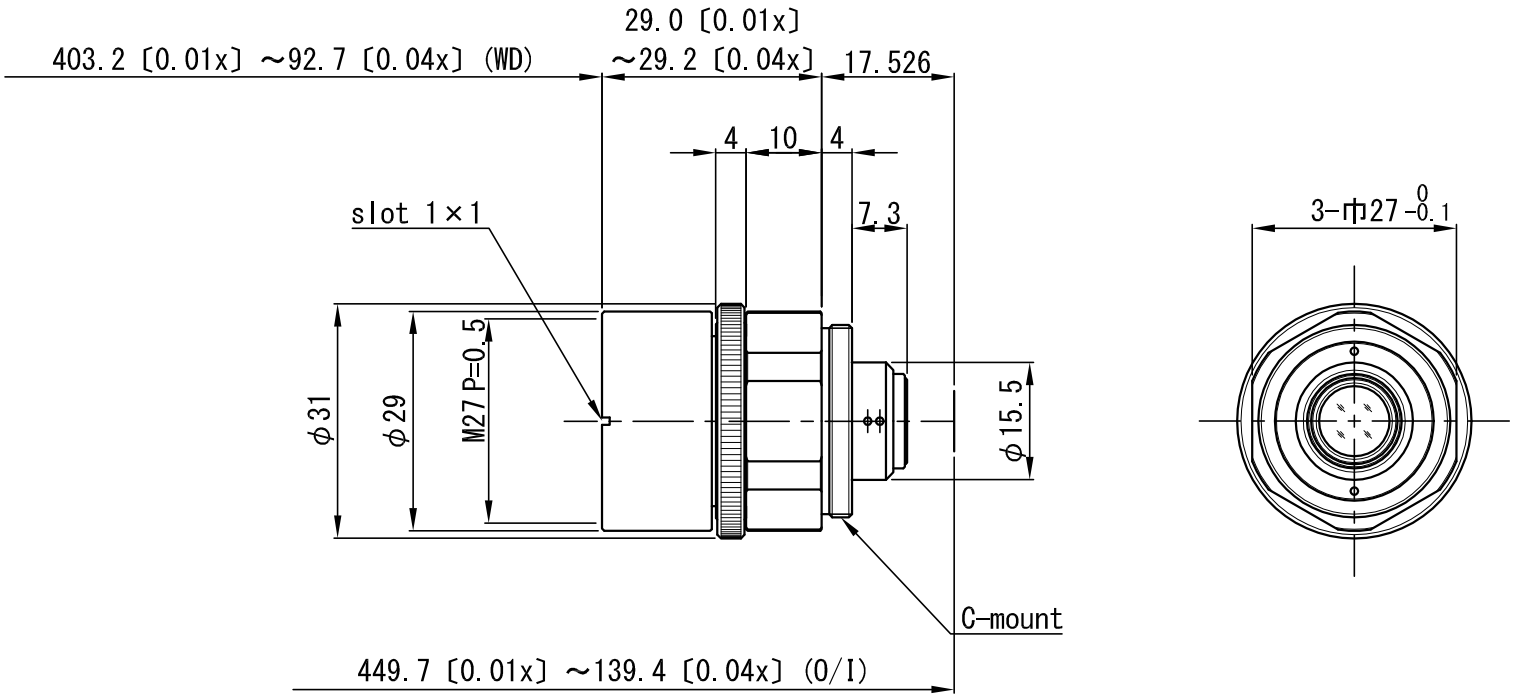

NO.×箇所	REVISION 訂正事項	DATE	NAME
△×			
△×			
△×			
△×			
△×			

APPROVED	CHECKED	DESIGNED	DRAWN
T.A.	T.A.	T.A.	T.T.

MATERIAL 材料	–	CHAMFER 一般面取	–	QUANTITY 個数	–
TREATMENT 処理	–	FINISHING 仕上	–		
TREATMENT CONTACT 処理接点	–	DECENTRATION 偏芯	–		

TOLERANCES	A	B	C	S
OVER 250 UP TO 1000	±0.3	±0.5	±1.0	±0.2
OVER 63 UP TO 250	±0.2	±0.3	±0.6	±0.15
OVER 16 UP TO 63	±0.1	±0.2	±0.4	±0.1
OVER 0 UP TO 16	±0.05	±0.1	±0.2	±0.1

UNIT(mm)	ANGLE 角度	METHOD 図法	REMARK 適用（機種名）
	–		VS-MCA4
SCALE	1 / 1	NAME	外観図
DATE	'17.04.05	DRAW NO.	ODMC0367A1