Confidential

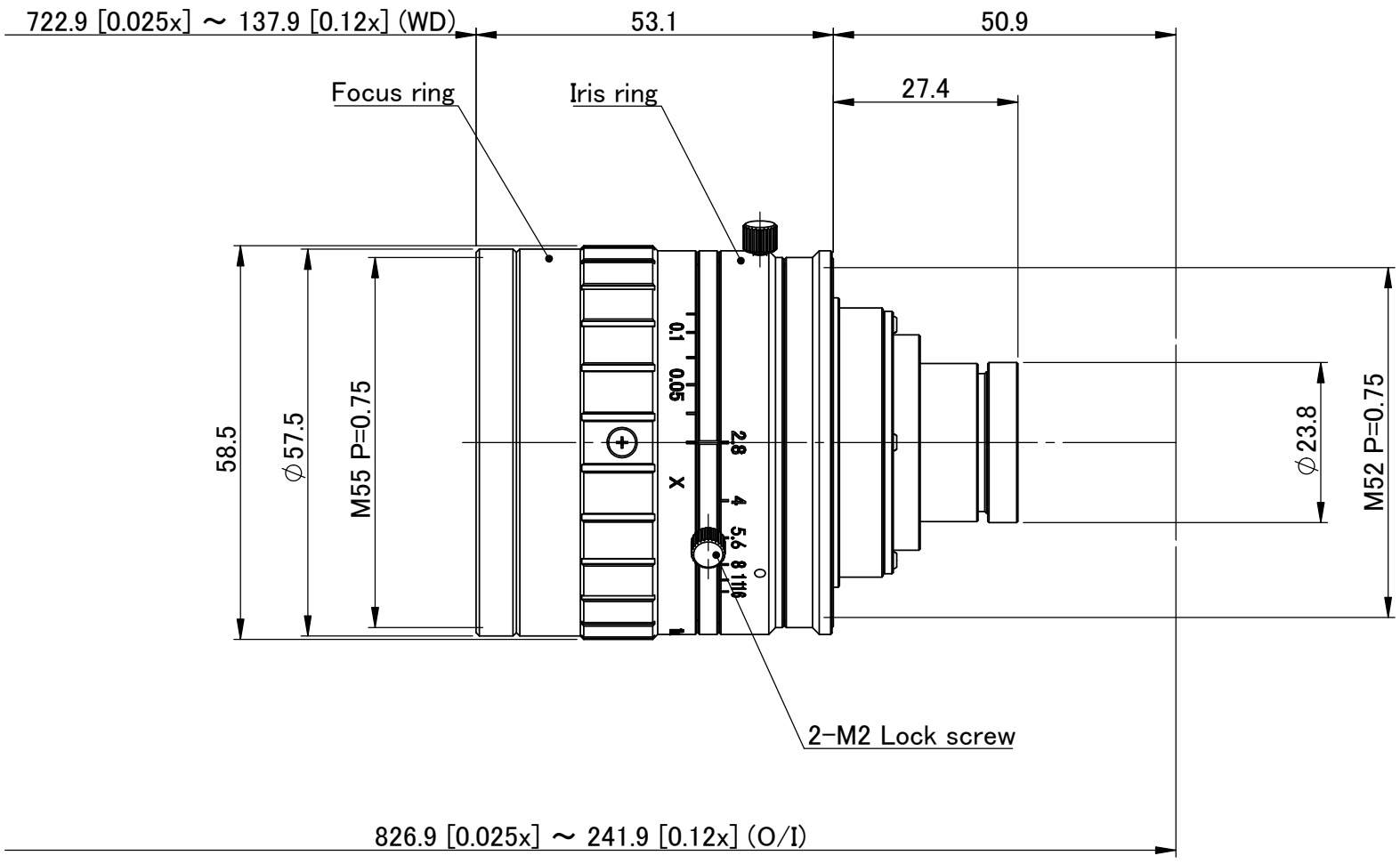

TREATMENT 処理	–		MATERIAL	–	UNIT	METHOD			
			CHAMFER	–					
TREATMENT CONTACT 処理接点	–		FINISHING	–	mm				
			DECENTRATION	–					
APPROVED	CHECKED	DESIGNED	DRAWN	TOLERANCE	–	REMARK	VS-L1828		
内川	内川	木村	木村	ANGLE	–	NAME	DRAWING		
				SCALE	1:1				
				DATE	2024.09.27.	DRAW NO.	M0459M-A00100		

NO. ×	REVISION	DATE	NAME
△×			