Confidential

Cable tag



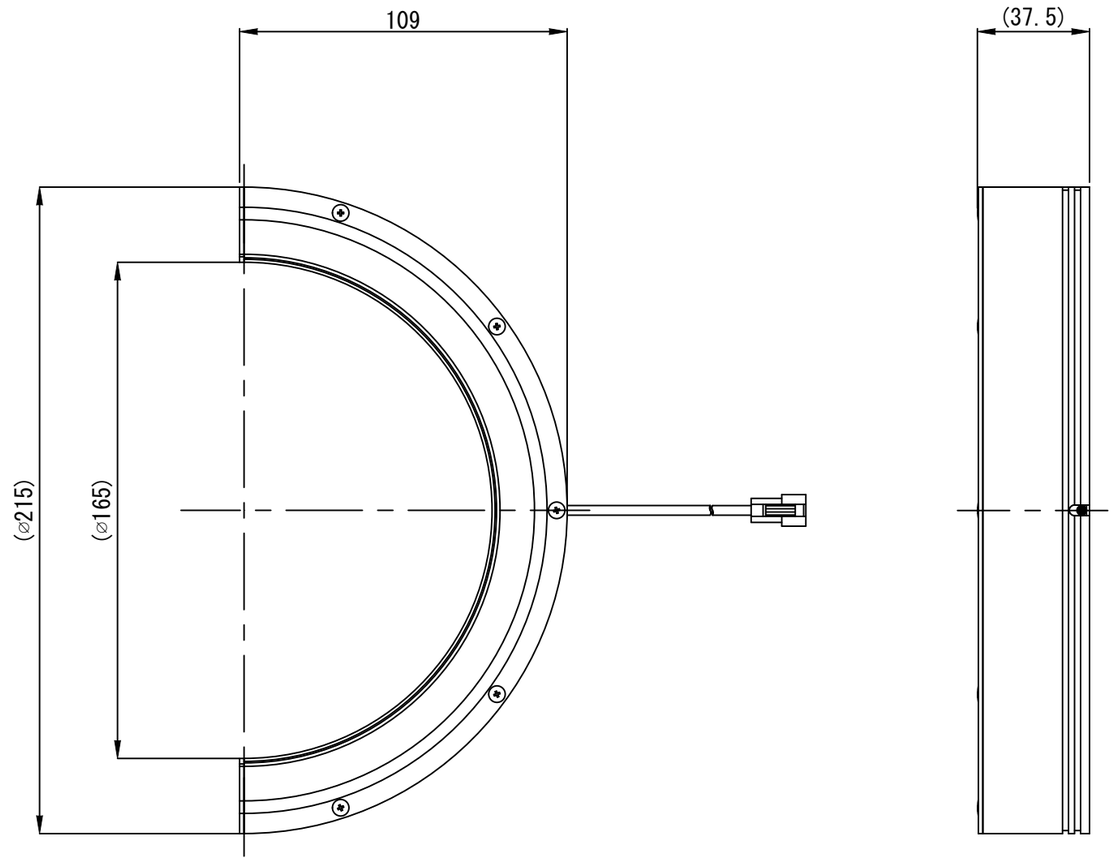

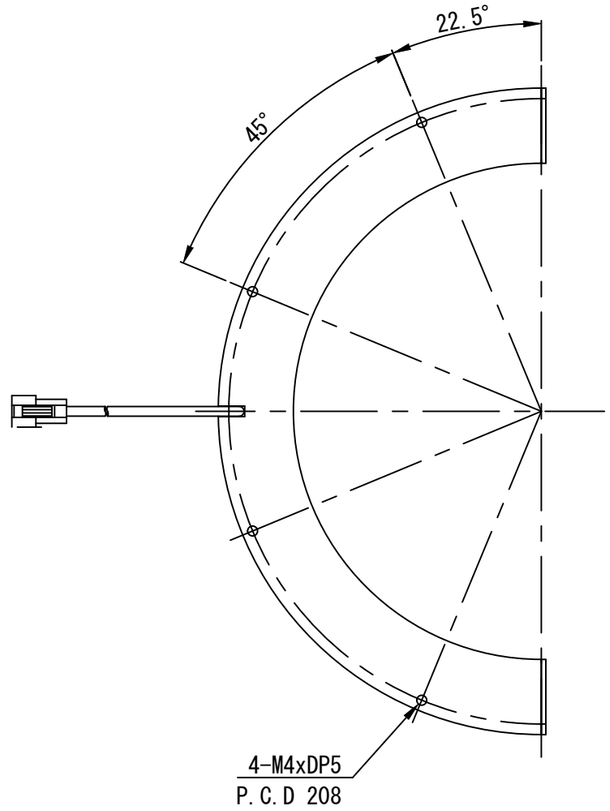

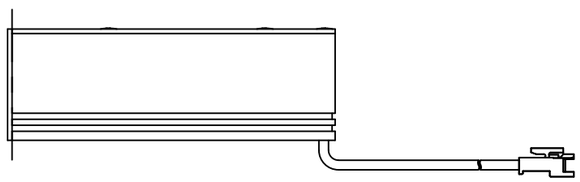

Connector : JST SMR-03V-B

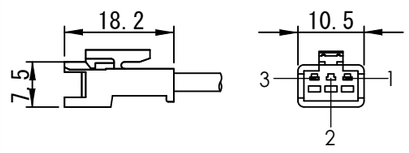

Minimum Bending Radius : 20mm
Length : 500±20mm
Note : This cable can not slide

Pin	Polarity	Wire Color
1	+	BK/WH
2	NC	
3	-	BK

TREATMENT 処理	–		MATERIAL	–	UNIT	METHOD			
	–		CHAMFER	–					
TREATMENT CONTACT 処理接点	–		FINISHING	–	mm				
	–		DECENTRATION	–					
APPROVED	CHECKED	DESIGNED	DRAWN	TOLERANCE	-	REMARK	VMR-215165-HF		
				ANGLE	-	NAME	DRAWING		
P.E.	S.K.	T.P.	T.P.	SCALE	1 / 2	DRAW NO.	L1530A-A00100		
				DATE	2025/06/20				

NO.	REVISION	DATE	NAME
⚠×			

Rev. 01