VS TECHNOLOGY CORPORATION

Confidential

Cable tag

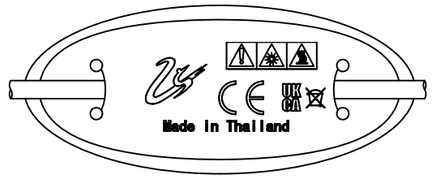

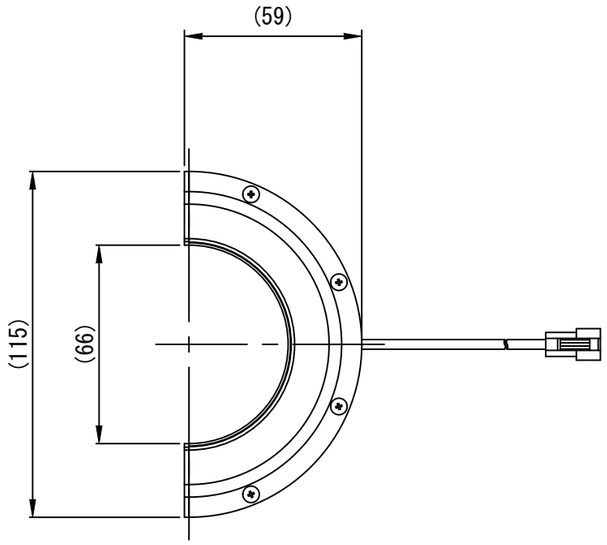

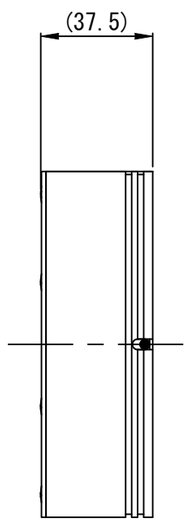

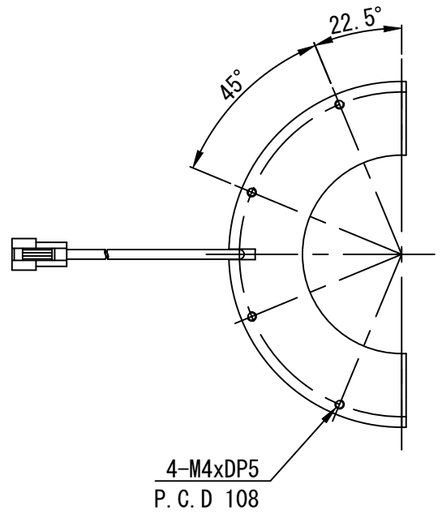

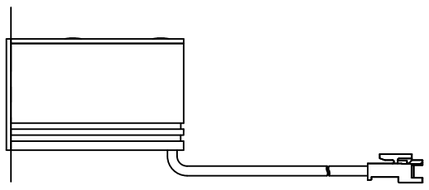

Connector : JST SMR-03V-B

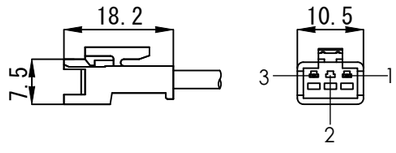

Minimum Bending Radius : 20mm
Length : 500±20mm
Note : This cable can not slide

Pin	Polarity	Wire Color
1	+	BK/WH
2	NC	
3	−	BK

TREATMENT 処理	−	MATERIAL	−	UNIT	METHOD		
	−	CHAMFER	−		
TREATMENT CONTACT 処理接点	−	FINISHING	−	mm	
	−	DECENTRATION	−		

APPROVED	CHECKED	DESIGNED	DRAWN	TOLERANCE	-	REMARK	VMR-11566-HF
P.E.	S.K.	T.P.	T.P.	ANGLE	-	NAME	DRAWING
				SCALE	1 / 2		
				DATE	2025/06/19	DRAW NO.	L1528A-A00100

⚠×			
NO.×	REVISION	DATE	NAME

Rev. 01