Confidential

Cable tag



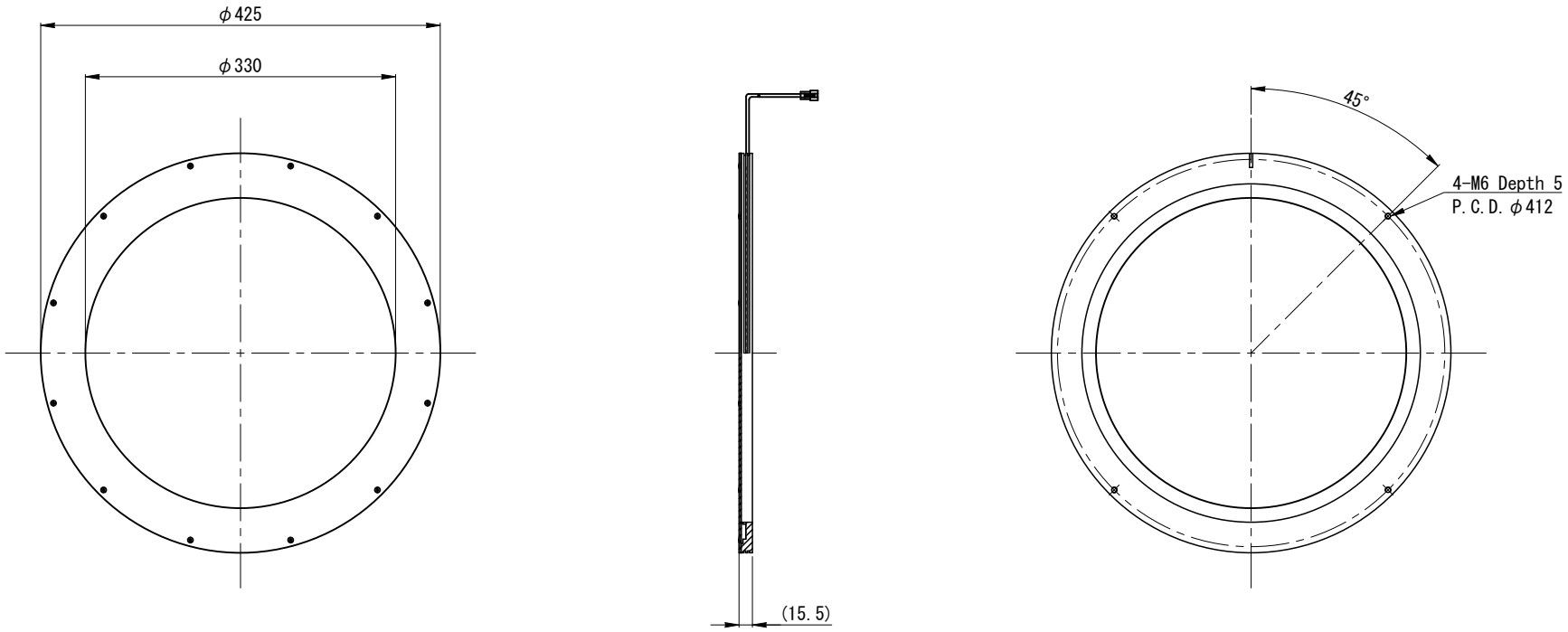

Connector : JST SMR-03V-B

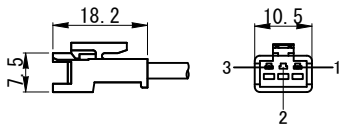

Minimum Bending Radius : 20mm
Length : 500±20mm
Note : This cable can not slide

Pin	Polarity	Wire Color
1	+	BK/WH
2	NC	
3	−	BK

MATERIAL			CHAMFER	−	UNIT	METHOD 図法
TREATMENT	−		FINISHING	−	mm	
TREATMENT CONTACT	−		DECENTRATION	−		

APPROVED	CHECKED	DESIGNED	DRAWN	TOLERANCE	−	REMARK	VMR-425330
				ANGLE	−		
P.E.	A.C.	A.C.	S.S.	SCALE	1 / 5	NAME	DRAWING
				DATE	2023/05/12	DRAW NO.	L1124A-A00100

NO.	REVISION	DATE	NAME
⚠×			