Confidential

Cable tag



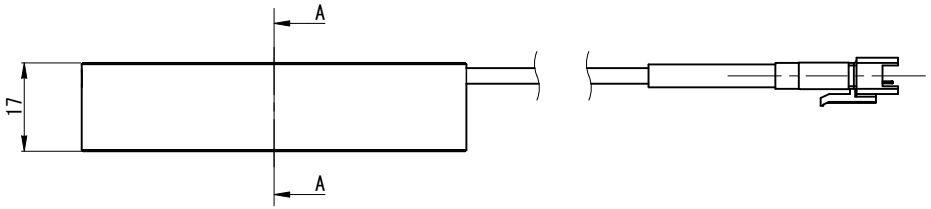

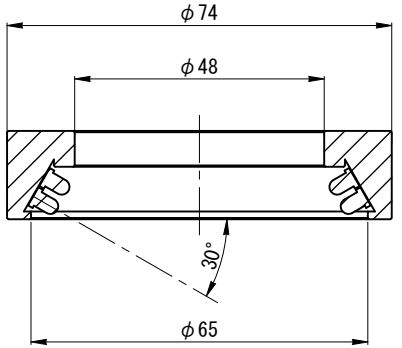

Section A:A

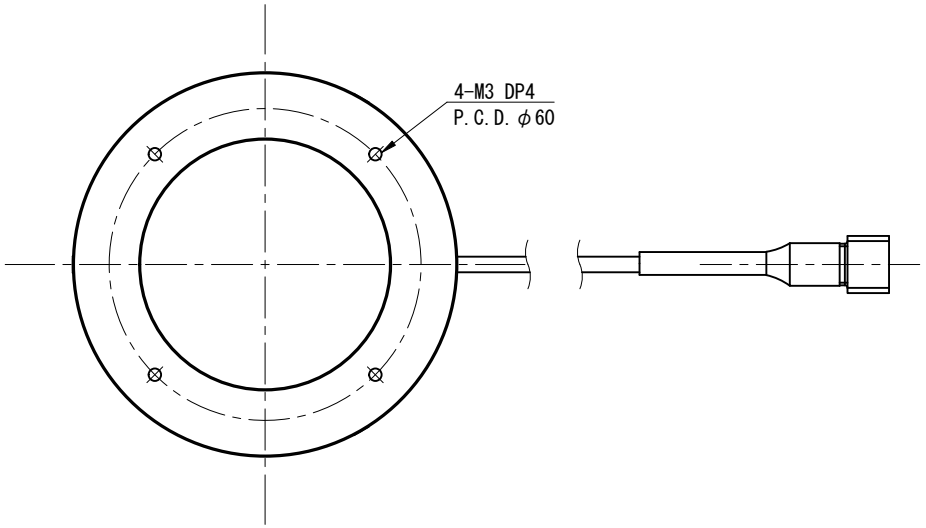

Connector : JST SMR-03V-B

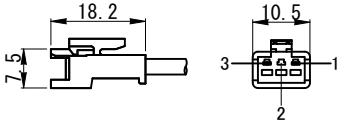

Minimum Bending Radius : 20mm
Length : 500±20mm
Note : This cable can not slide

Pin	Polarity	Wire Color
1	+	BK/WH
2	NC	
3	−	BK

MATERIAL			CHAMFER	−	UNIT	METHOD 図法
TREATMENT	−		FINISHING	−	mm	
TREATMENT CONTACT	−		DECENTRATION	−		

APPROVED	CHECKED	DESIGNED	DRAWN	TOLERANCE	−	REMARK	VLR-7448
				ANGLE	−		
LEE	LEE	DENY	DENY	SCALE	1 / 1	NAME	DRAWING
				DATE	2021/05/10	DRAW NO.	L1109A-A00100

NO.	REVISION	DATE	NAME
⚠×			