VS TECHNOLOGY CORPORATION

Confidential

Cable tag



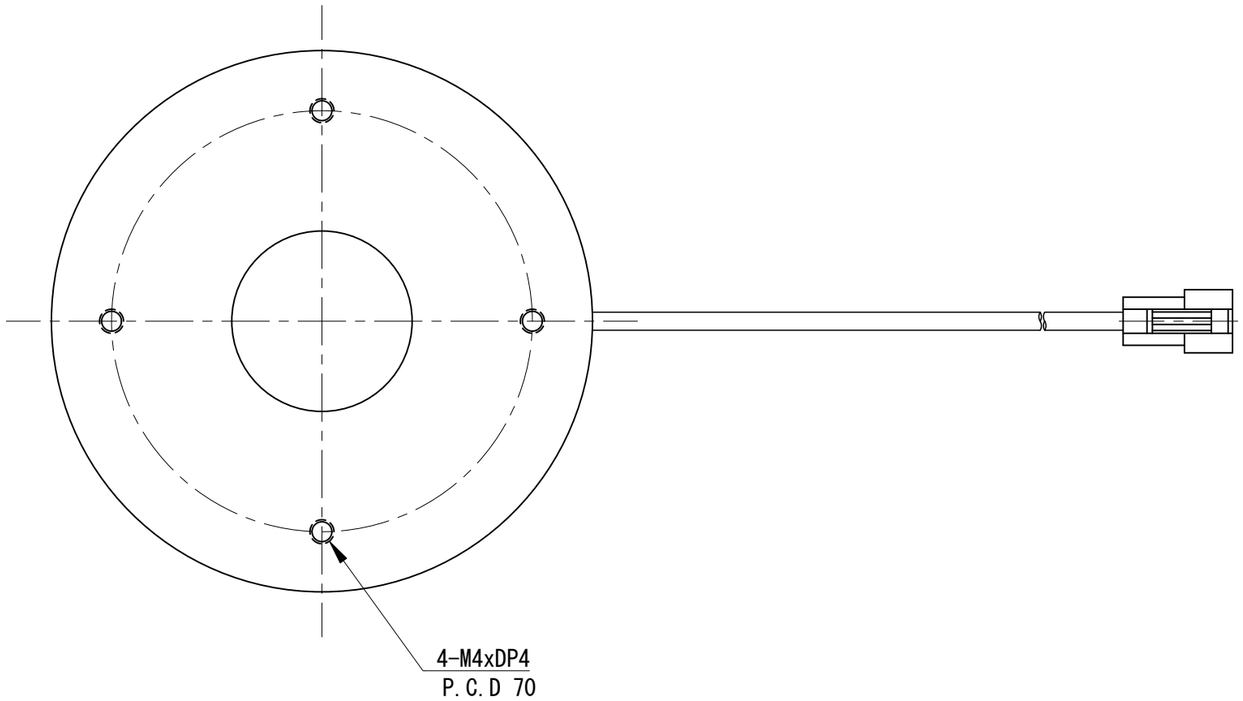

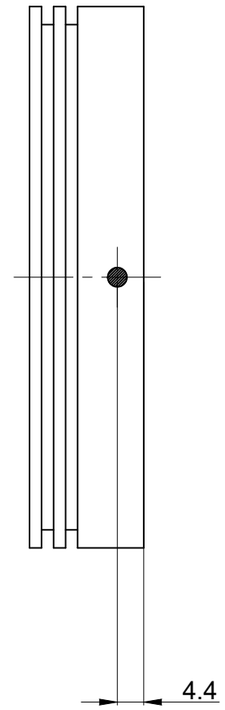

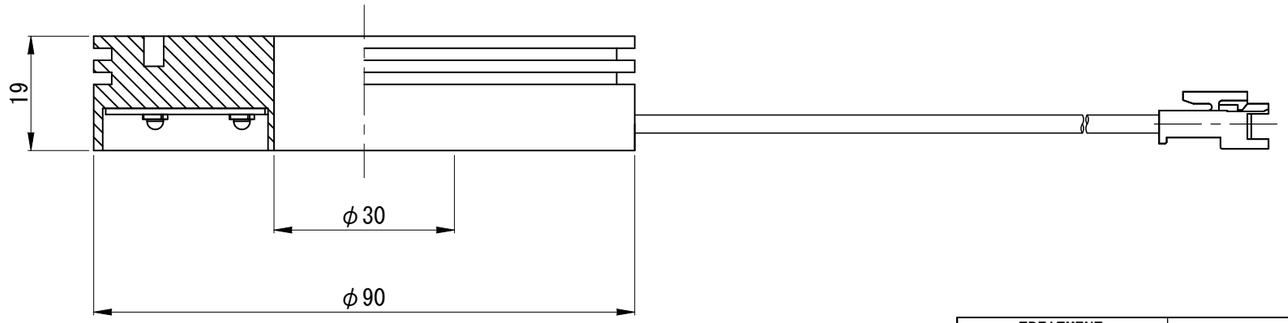

Connector : JST SMR-03V-B

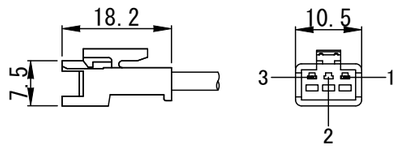

Minimum Bending Radius : 20mm
Length : 500±20mm
Note : This cable can not slide

Pin	Polarity	Wire Color
1	+	BK/WH
2	NC	
3	−	BK

TREATMENT 処理	−		MATERIAL	−	UNIT	METHOD			
	−		CHAMFER	−					
TREATMENT CONTACT 処理接点	−		FINISHING	−	mm				
	−		DECENTRATION	−					

APPROVED	CHECKED	DESIGNED	DRAWN	TOLERANCE	−	REMARK	VFR-9030
				ANGLE	−	NAME	DRAWING
P.E.	S.K.	S.S.	W.K.	SCALE	1 / 1		
				DATE	2024/06/21	DRAW NO.	L1345E-A00100

⚠×			
NO.×	REVISION	DATE	NAME

Rev. 01