

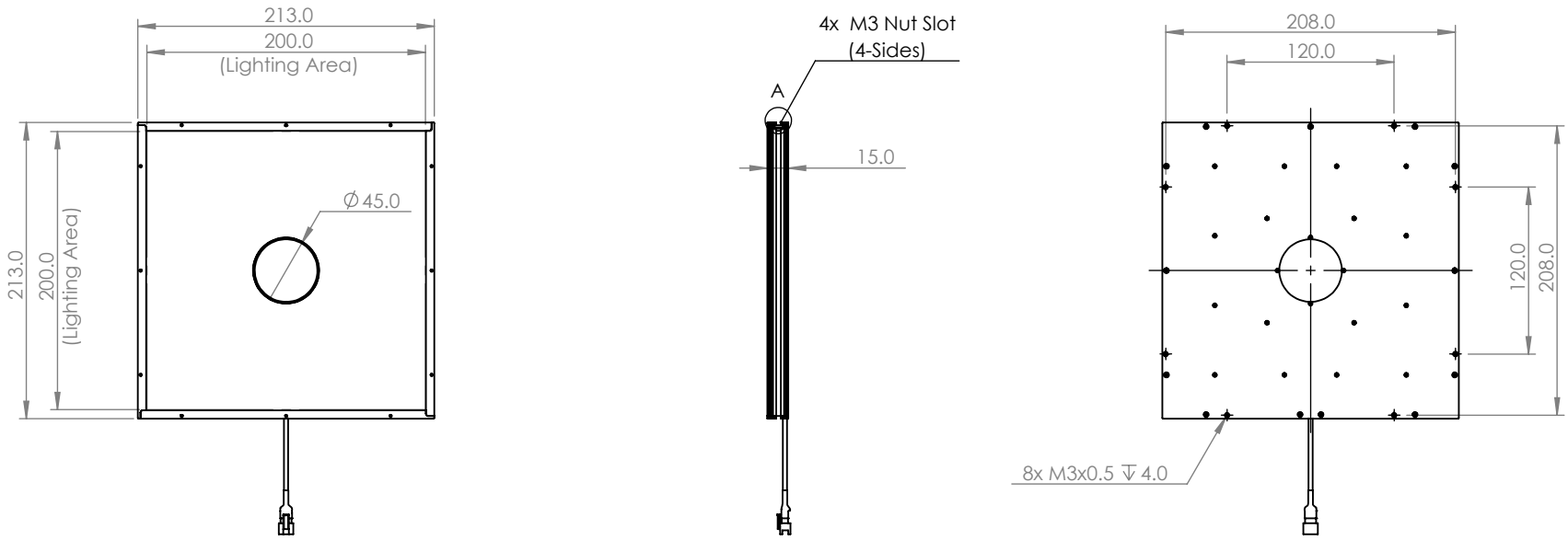


| Pin Table | |
|---|---|
|  | 1. V+ |
| | 2. N.C. |
| | 3. V- |

Standard Cable Length : 500mm
Standard Connector : SM2.5 3P

**Note:**
Model Name Descriptions
VDFH-200200☐
☐ : Color

| No. / TOTAL | REVISION | DATE | NAME |
|---|---|---|---|
| △× | | | |
| △× | | | |
| △× | | | |
| △× | | | |
| △× | REPLACE PART : RING | 2023/4/12 | Alex |

| APPROVED | CHECKED |
|---|---|
| – | – |
| DESIGNED | DRAWN |
| Alex | Alex |

| | | | | |
|---|---|---|---|---|
| MATERIAL | - | CHAMFER | - | QUANTITY |
| TREATMENT | - | FINISHING | - | - |
| TREATMENT CONTACT | - | DECENTRATION | - | |

| TOLERANCES | A | B | C | S |
|---|---|---|---|---|
| OVER 250 UP TO 1000 | ±0.3 | ±0.5 | ±1.0 | ±0.2 |
| OVER 63 UP TO 250 | ±0.2 | ±0.3 | ±0.6 | ±0.15 |
| OVER 16 UP TO 63 | ±0.1 | ±0.2 | ±0.4 | ±0.1 |
| OVER 0 UP TO 16 | ±0.05 | ±0.1 | ±0.2 | ±0.1 |

| UNIT (mm) | ANGLE | METHOD | REMARK ( MODEL ) |
|---|---|---|---|
| | - | | VDFH-200200 |
| SCALE | 1:5 | NAME | DRAWING |
| DATE | 2023/4/12 | DRAW NO. | TMDF3018D101A |