VS TECHNOLOGY CORPORATION

Made in Taiwan

THE TAG WILL BE ATTACHED TO THE CABLE.

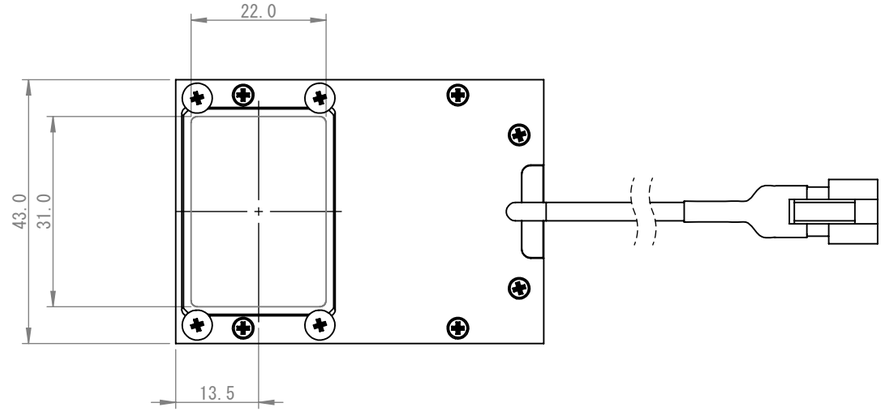

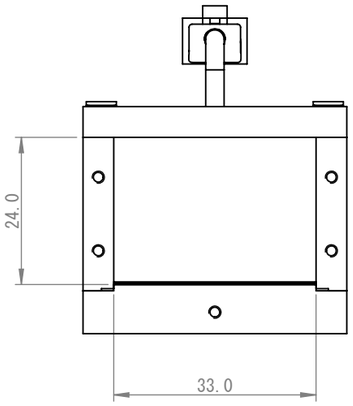

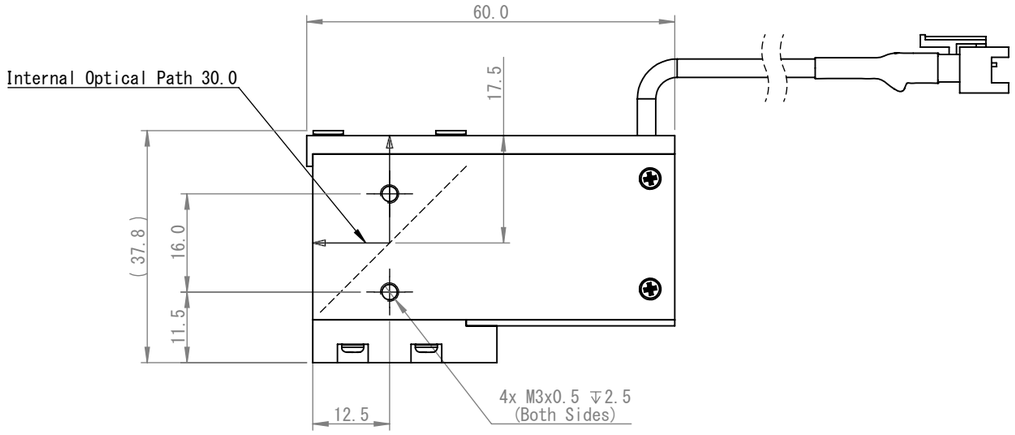

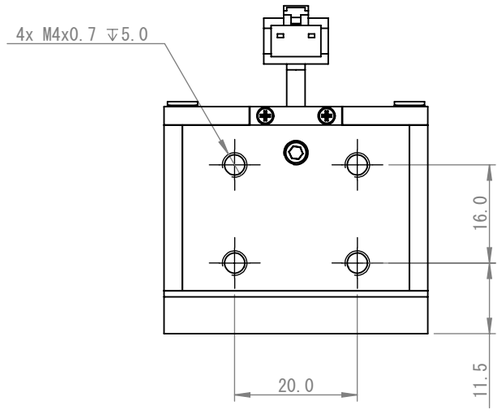

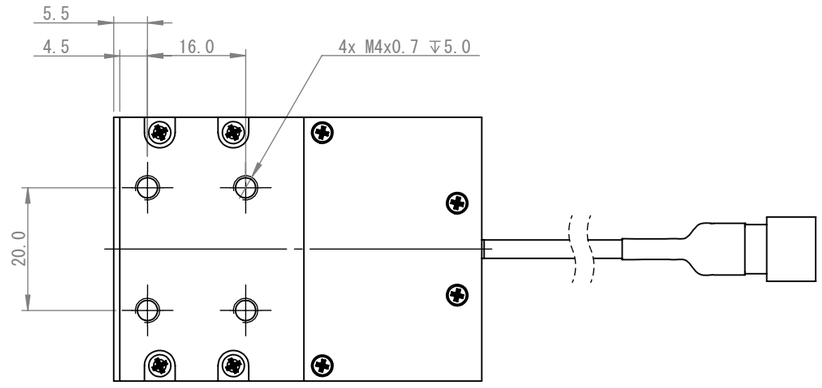

Cable: Minimum Bending Radius : 20mm (Stationary, Non-Flexible Cable)
Length : 500±20mm

Connector : JST SMR-03V-B

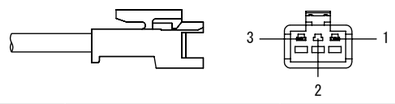

Pin	Polarity	Wire Color
1	+	RED
2	NC	
3	-	BK

MATERIAL	-	CHAMFER	-	UNIT	METHOD
TREATMENT	-	FINISHING	-	mm	
TREATMENT CONTACT	-	DECENTRATION	-		

APPROVED	CHECKED	DESIGNED	DRAWN	TOLERANCE	-	REMARK	VCO-3325-RA
T.Y.	T.Y.	A.L.	A.L.	ANGLE	-		
				SCALE	1 / 1	NAME	DRAWING
				DATE	2023/11/29	DRAW NO.	L1169A-A00100

NO.	REVISION	DATE	NAME
⚠1 ×			