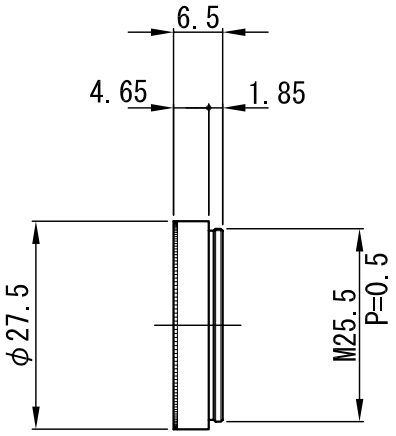

△				APPROVED	CHECKED	MATERIAL 材料		–	CHAMFER 一般面取	–	QUANTITY 個数				
△				T.M.	T.M.	TREATMENT 処理		–	FINISHING 仕上	–	–				
△						TREATMENT CONTACT 処理接点		–	DECENTRATION 偏芯	–					
△				DESIGNED	DRAWN	OVER 250 UP TO 1000	±0.3	±0.5	±1.0	±0.2	UNIT(mm)	ANGLE 角度	METHOD 図法	REMARK 適用（機種名）	
△						OVER 63 UP TO 250	±0.2	±0.3	±0.6	±0.15		–		SV-IR255	
△				M.K.	M.Y.	OVER 16 UP TO 63	±0.1	±0.2	±0.4	±0.1	SCALE	1 / 1	NAME	外観図	
	DATE	EXCH NO.	REVISION 変更記事			OVER 0 UP TO 16	±0.05	±0.1	±0.2	±0.1	DATE	'13.02.05	DRAW NO.	ODFL0043A1	
						TOLERANCES	Ⓐ	B	C	S					