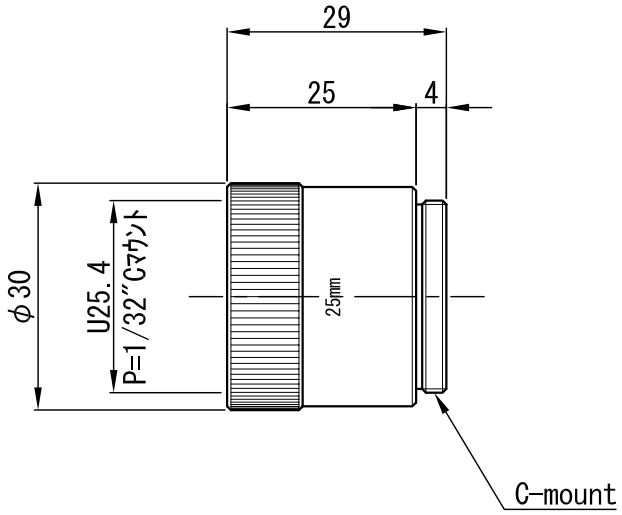


| | | | | | | | | | | | | | | | |
|---|---|---|---|---|---|---|---|---|---|---|---|---|---|---|---|
| △ | | | | APPROVED | CHECKED | MATERIAL 材料 | | – | | CHAMFER 一般面取 | – | QUANTITY 個数 | | | |
| △ | | | | T.A. | T.A. | TREATMENT 処理 | | – | | FINISHING 仕上 | – | – | | | |
| △ | | | | | | TREATMENT CONTACT 処理接点 | | – | | DECENTRATION 偏芯 | – | | | | |
| △ | | | | | | OVER 250 UP TO 1000 | ±0.3 | ±0.5 | ±1.0 | ±0.2 | UNIT(mm) | ANGLE 角度 | METHOD 図法 | REMARK 適用（機種名） | | |
| △ | | | | DESIGNED | DRAWN | OVER 63 UP TO 250 | ±0.2 | ±0.3 | ±0.6 | ±0.15 | | – | | SV-EXR25 | | |
| △ | | | | | | OVER 16 UP TO 63 | ±0.1 | ±0.2 | ±0.4 | ±0.1 | SCALE | 1 / 1 | NAME | 外観図 | | |
| | DATE | EXCH NO. | REVISION 変更記事 | T.T. | S.K. | OVER 0 UP TO 16 | ±0.05 | ±0.1 | ±0.2 | ±0.1 | DATE | '11.05.24 | DRAW NO. | ODADO019A1 | | |
| | | | | | | TOLERANCES | Ⓐ | B | C | S | | | | | | |