Confidential

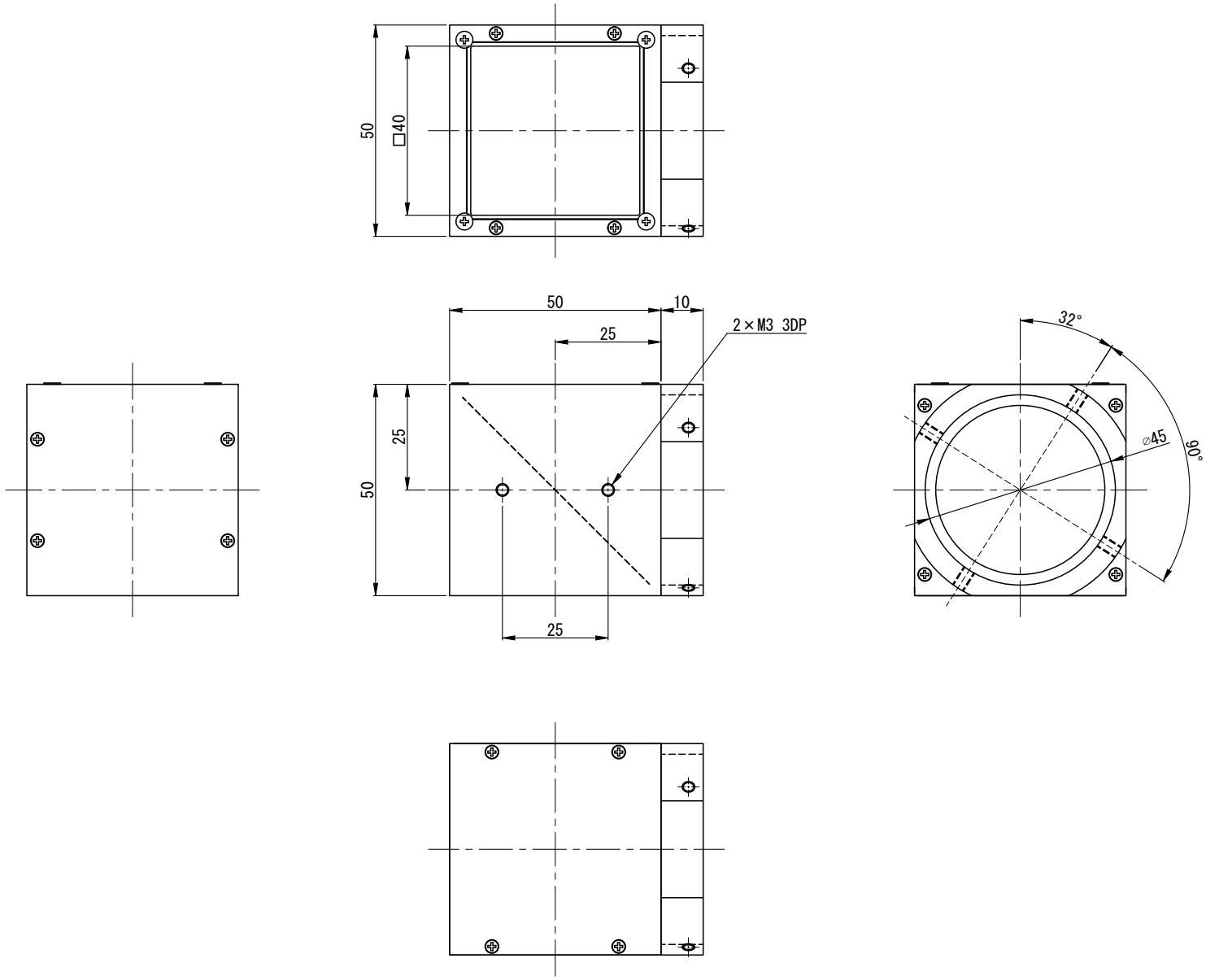

MATERIAL					CHAMFER	–	UNIT	METHOD 図法			
TREATMENT	–				FINISHING	–	mm				
TREATMENT CONTACT	–				DECENTRATION	–					
APPROVED	CHECKED	DESIGNED	DRAWN	TOLERANCE	–	REMARK	RAU-VCL30				
P. E.	P. E.	S. S.	T. P.	ANGLE	–	NAME	DRAWING				
				SCALE	1 / 1	DRAW NO.	T1108A-A00100				
				DATE	2023/11/09						

⚠×			
NO. ×	REVISION	DATE	NAME