Confidential

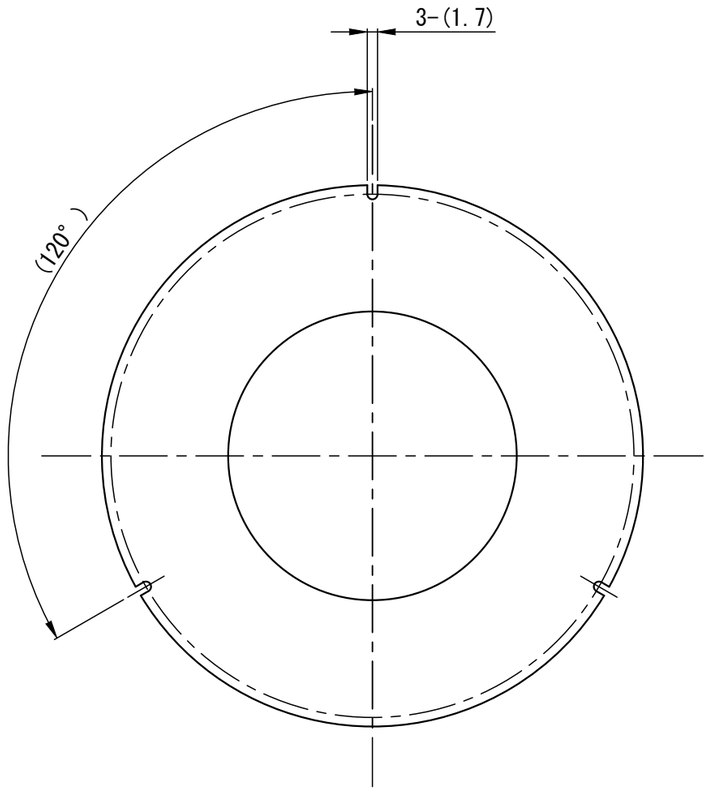

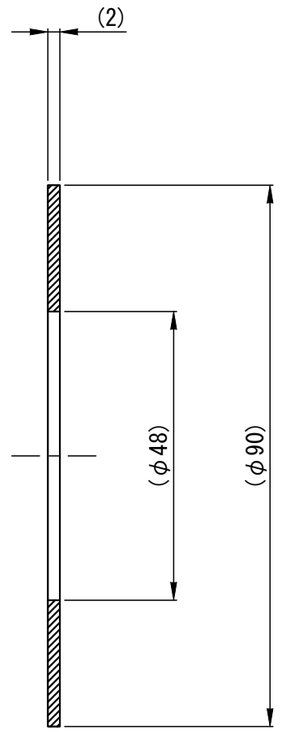

TREATMENT 処理	–			MATERIAL	–	UNIT	METHOD				
	–			CHAMFER	–						
TREATMENT CONTACT 処理接点	–			FINISHING	–	mm					
	–			DECENTRATION	–						

APPROVED	CHECKED	DESIGNED	DRAWN	TOLERANCE	–	REMARK	DF-VDR9050-M
P.E.	P.E.	S.K.	S.K.	ANGLE	–	NAME	DRAWING
				SCALE	1 / 1		
				DATE	2023/09/01	DRAW NO.	T1109D-A00100

NO.×	REVISION	DATE	NAME
⚠1×			

Rev. 01