Confidential

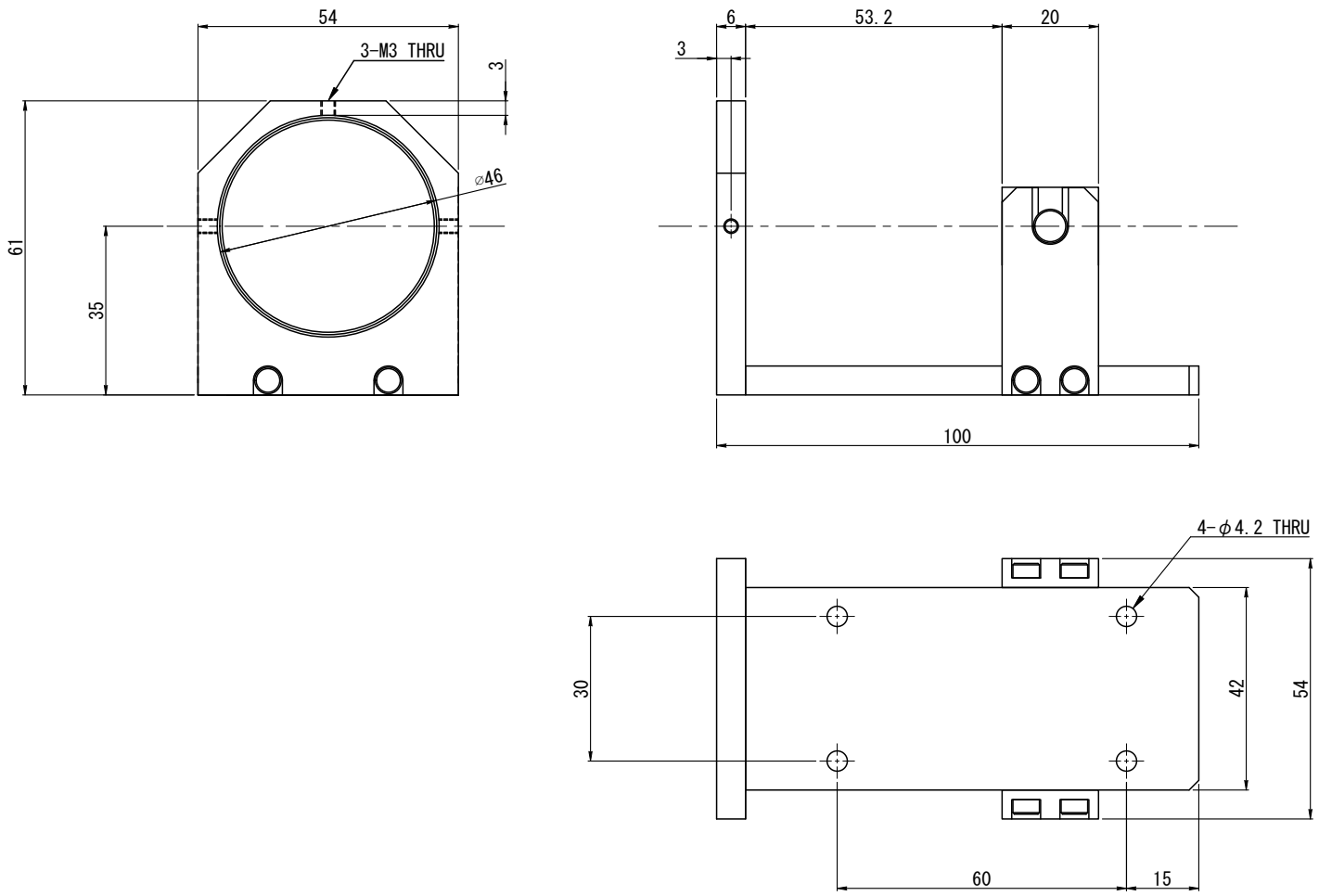

MATERIAL				CHAMFER	–	UNIT	METHOD 図法
TREATMENT	–			FINISHING	–	mm	
TREATMENT CONTACT	–			DECENTRATION	–		
APPROVED	CHECKED	DESIGNED	DRAWN	TOLERANCE	–	REMARK	AD-VCL30
P. E.	P. E.	S. S.	T. P.	ANGLE	–	NAME	DRAWING
				SCALE	1 / 1	DRAW NO.	T1107A-A00100
				DATE	2024/01/08		

NO. ×	REVISION	DATE	NAME
⚠×			