Confidential

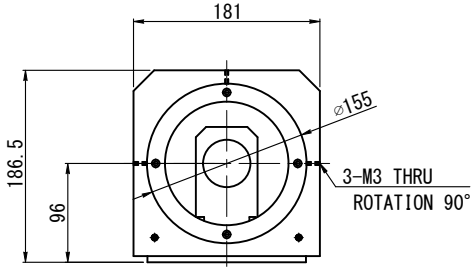

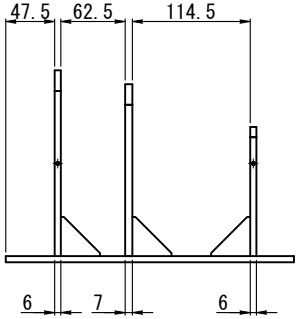

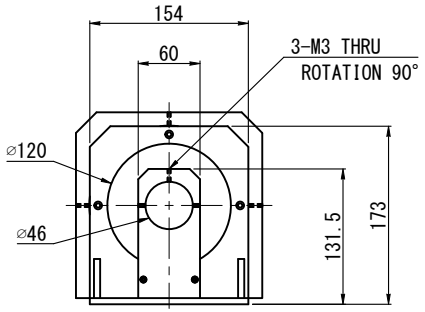

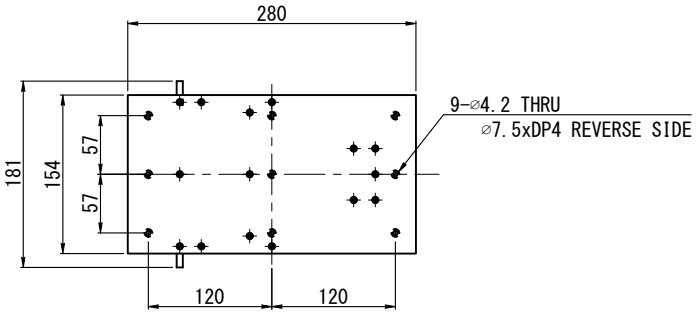

MATERIAL					CHAMFER	–	UNIT	METHOD 図法			
TREATMENT	–				FINISHING	–	mm				
TREATMENT CONTACT	–				DECENTRATION	–					
APPROVED	CHECKED	DESIGNED	DRAWN	TOLERANCE	–	REMARK	AD-VCL150				
P.E.	S.K.	T.P.	T.P.	ANGLE	–	NAME	DRAWING				
				SCALE	1 / 5	DRAW NO.	T1107D-A00100				
				DATE	2024/02/13						

⚠×			
NO. ×	REVISION	DATE	NAME